PRODUCT DATASHEET
FL PFM 125 W 4000 K SYM 100 BK

FLOODLIGHT 125 W | Versatile floodlight with up to 15000 lm light output

Areas of application

- Replacement for floodlights with halogen lamps
- Outdoor use (IP65)
- Industry
- Public areas
- Construction areas
- Building facades

Product benefits

- Bright, robust and durable
- Safe and very uniform illumination, due to frosted and tempered glass diffuser
- No upper light output ratio (ULOR 0%) when mounted at 0° tilt
- Energy savings of up to 90 % compared to halogen lamp floodlights
- 5 years guarantee

Product features

- Reflector-based, symmetric light distribution with 100° x 100° beam angle
- Integrated wide voltage driver, suitable for 100 - 277 V $_{AC}$
- Surge protection: up to 6 kV (L/N-PE), 4 kV (L-N)
- Mounting bracket with 30° angle and wide rotation area
- Breather membrane to optimize air exchange, without compromising IP protection
- Pre-installed, flexible 1 m cable (H05RN-F), wrapped 3 x 1.0 mm² single wires

© 2023, LEDVANCE GmbH. All rights reserved.

TECHNICAL DATA

Electrical data

Nominal wattage	125.00 W
Nominal voltage	100...277 V
Mains frequency	50...60 Hz
Nominal current	630 mA
Inrush current	60 A
Inrush current time T_{h50}	1000 µs
Max. no. of lum. on circuit break. B16 A	4
Max. no. of lum. on circuit break. C10 A	7
Max. no. of lum. on circuit break. C16 A	11
Power factor λ	> 0.90
Total harmonic distortion	< 20 %
Protection class	I
Operating mode	Integrated LED driver

Photometrical data

Luminous flux	15000 lm
Luminous efficacy	120 lm/W
Color temperature	4000 K
Light color (designation)	Cool White
Color rendering index Ra	≥80
Standard deviation of color matching	≤5 sdcm
Luminous intensity	-
Low flicker	Yes
Flickering metric (Pst LM)	-
Stroboscope effect metric (SVM)	-
Photobiological safety group acc. to EN62778	RG1
Photobiological safety group acc. to EN62471	RG1
Beam angle	100 ° x 100 °

© 2023, LEDVANCE GmbH. All rights reserved.

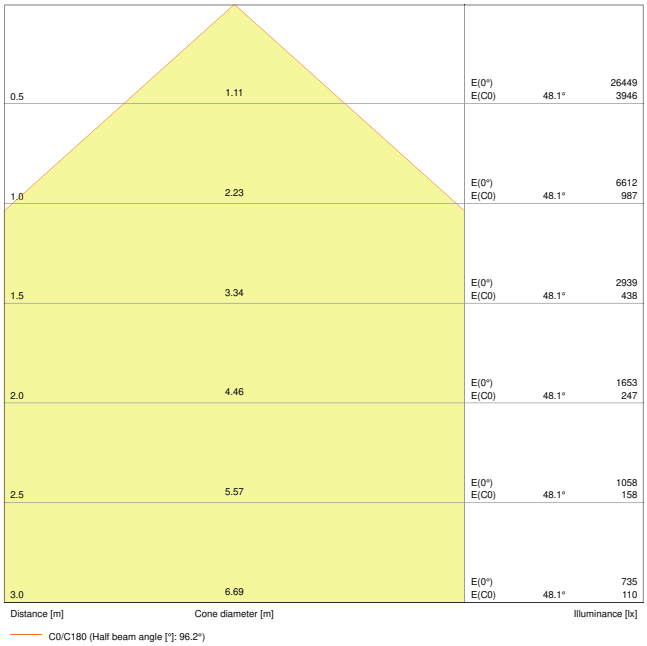

LDC typ cone

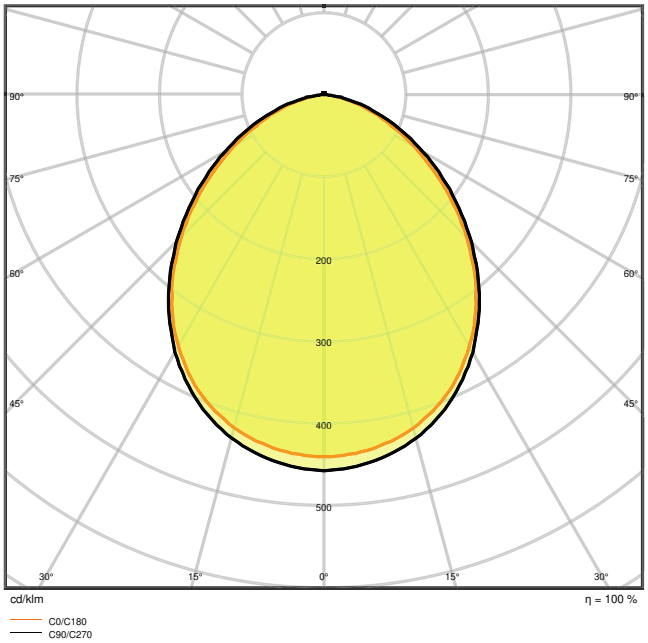

LDC typ polar

Dimensions & Weight

Length	381.00 mm
Width	290.00 mm
Height	59.00 mm
Product weight	3800.00 g
Cable length	1000 mm

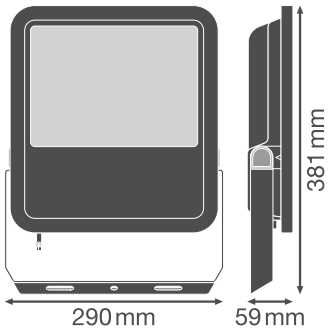

© 2023, LEDVANCE GmbH. All rights reserved.

Materials & Colors

Product color	Black
Housing color	Black
Body material	Aluminum
Light emitting surface material	Glass
Glow Wire Test according to IEC 60695-2-12	650 °C
Mercury content	0.0 mg

Application & Mounting

Ambient temperature range	-30...+50 °C
Temperature range at storage	-40...+70 °C
Type of connection	Cable, 3-pole
Type of protection	IP65
Protection class IK (shock resistance)	IK08
Dimmable	No
Mounting type	Surface
Mounting location	Wall / Pole / Floor / Ceiling
Application environment	Outdoor
Adjustable	Yes
LED module replaceable	Not replaceable
With light source	Yes

Lifespan

Lifespan L70/B50 at 25 °C	70000 h
Lifespan L80/B10 at 25 °C	55000 h
Lifespan L90/B10 at 25 °C	35000 h
Number of switching cycles	100000

Control gear

Output current	740 mA
ECG - Output ripple current	< 35 %

Certificates & Standards

Standards	CE / CB / ENEC / EAC / RoHS
Luminaire with limited surface temperature, "D sign"	No
Ball shot safe	No

© 2023, LEDVANCE GmbH. All rights reserved.

Safety advice

- Max. wind load surface 0.083 m²

DOWNLOAD DATA

	DOWNLOAD DATA
PDF	User instruction
PDF	Addon Technical Information
PDF	Addon Technical Information
	Tender documents
PDF	Declarations Of Conformity CE
	IES file (IES)
	LDT file (Eulumdat)
	R3D file (Relux 3D Model)
	M4D file (3D Model with rotation axis)
	ULD file (DIALux)
	UGR file (UGR table)
PDF	Packaging insert

LOGISTICAL DATA

Product code	Packaging unit (Pieces/Unit)	Dimensions (length x width x height)	Gross weight	Volume
4058075423701	Shipping box 1	343 mm x 92 mm x 443 mm	4305.00 g	13.98 dm³

The mentioned product code describes the smallest quantity unit which can be ordered. One shipping unit can contain one or more single products. When placing an order, for the quantity please enter single or multiples of a shipping unit.

© 2023, LEDVANCE GmbH. All rights reserved.

ADDITIONAL CATALOG INFORMATION

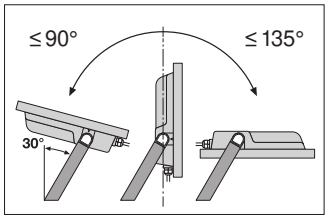

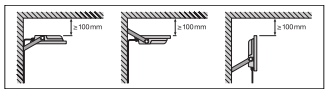

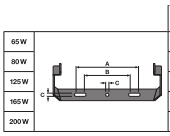

	A	B	C		
65 W	150	108	8,5	2x M8	0,046 m²
80 W	150	108	10,5	2x M10	0,061 m²
125 W	170	118	10,5	2x M10	0,083 m²
165 W	170	118	12,5	2x M12	0,102 m²
200 W	170	118	12,5	2x M12	0,124 m²

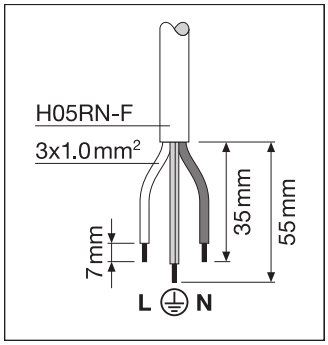

References / Links

- For Guarantee see www.ledvance.com/guarantee

DISCLAIMER

Subject to change without notice. Errors and omission excepted. Always make sure to use the most recent release.

© 2023, LEDVANCE GmbH. All rights reserved.